HOSET

NEW MODELS | 2023

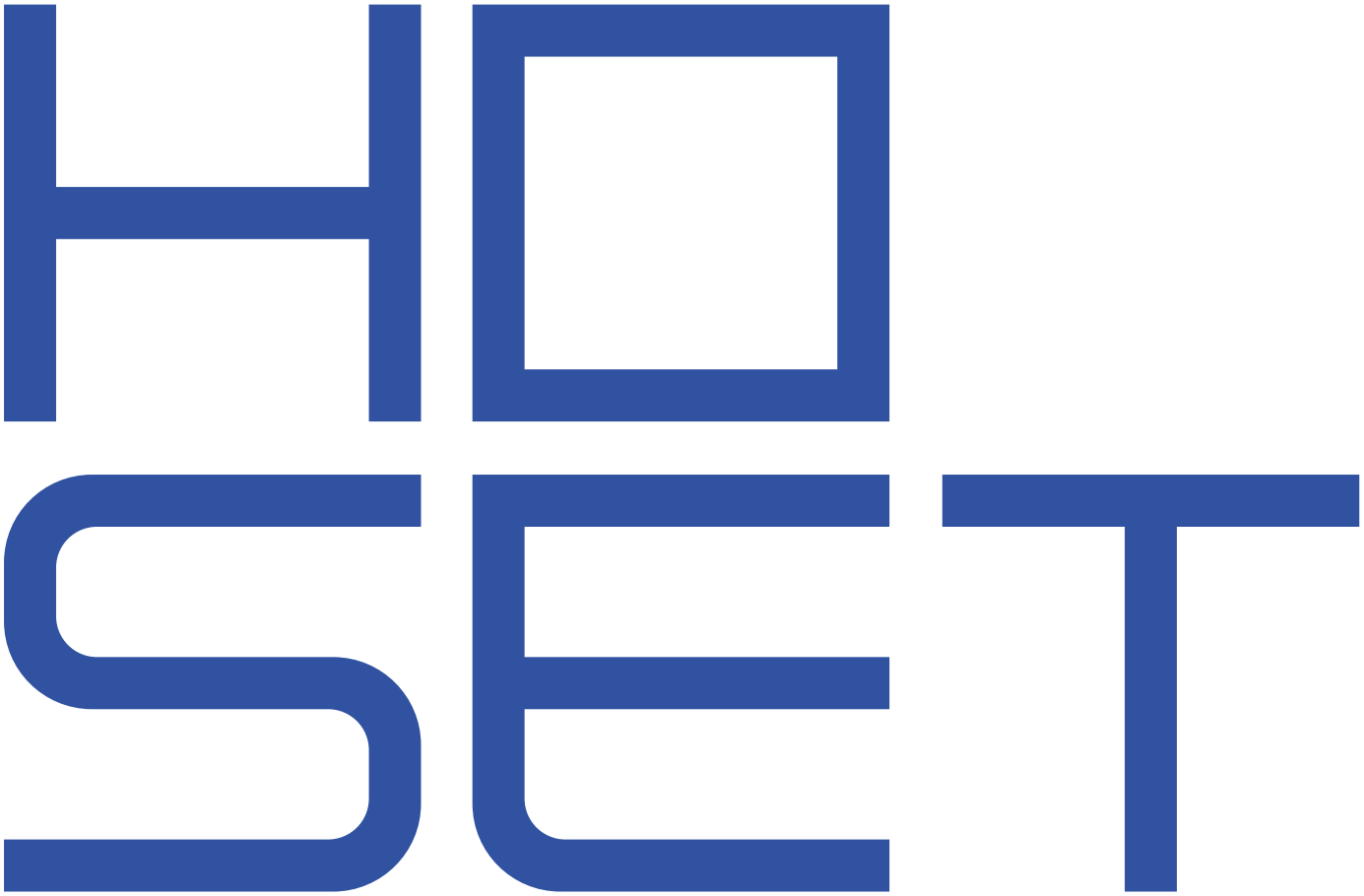
HO
SET

BAUXITE

Bauxite is a sedimentary rock, consisting mainly of aluminum oxides and hydroxides, as well as iron oxide and various impurities (clay particles). In appearance, bauxites are very diverse. Their color is usually red, brownish brown, less often gray, white, yellow, black. The name comes from the area of Les Baux-de-Provence in the south of France, rich in bauxite deposits. This rock is extracted only in 18 countries of the world.

White bauxite is used in the production of HOSET sanitary ware. Additionally, only polyester resin is added. It is bauxite that gives plumbing products their white color and velvety texture. The material is antibacterial and even used in the medical sphere.

HOSET technology bauxite products

HOSET - HOSET IS A NEW TECHNOLOGY FOR THE PRODUCTION OF SANITARY WARE WITH AN IMPECCABLY MATTE FINISH.

The composition of the new material includes 80% bauxite and 20% polyester resin with additives.

Bauxite is a natural material that can be processed and mixed with resin. Thanks to its properties, bathtubs, washbasins and shower trays are as hard as stone, but have a pleasant matte finish.

Manufacturing according to HOSET technology is matte and homogeneous throughout the entire thickness of the product.

ADVANTAGES OF MIRASOFT PRODUCTS:

Easy care – you only need a sponge (abrasive part) and detergent.

Durability. We give a 10-year warranty on all our products and assure that the product will not lose its original appearance.

Impact resistance. The material is resistant to mechanical pressure.

Maintainability. Shallow scratches are cleaned with the abrasive side of the sponge or sandpaper. Deep chips can be repaired with our repair kit.

Warm surface. The material takes on the temperature of the room.

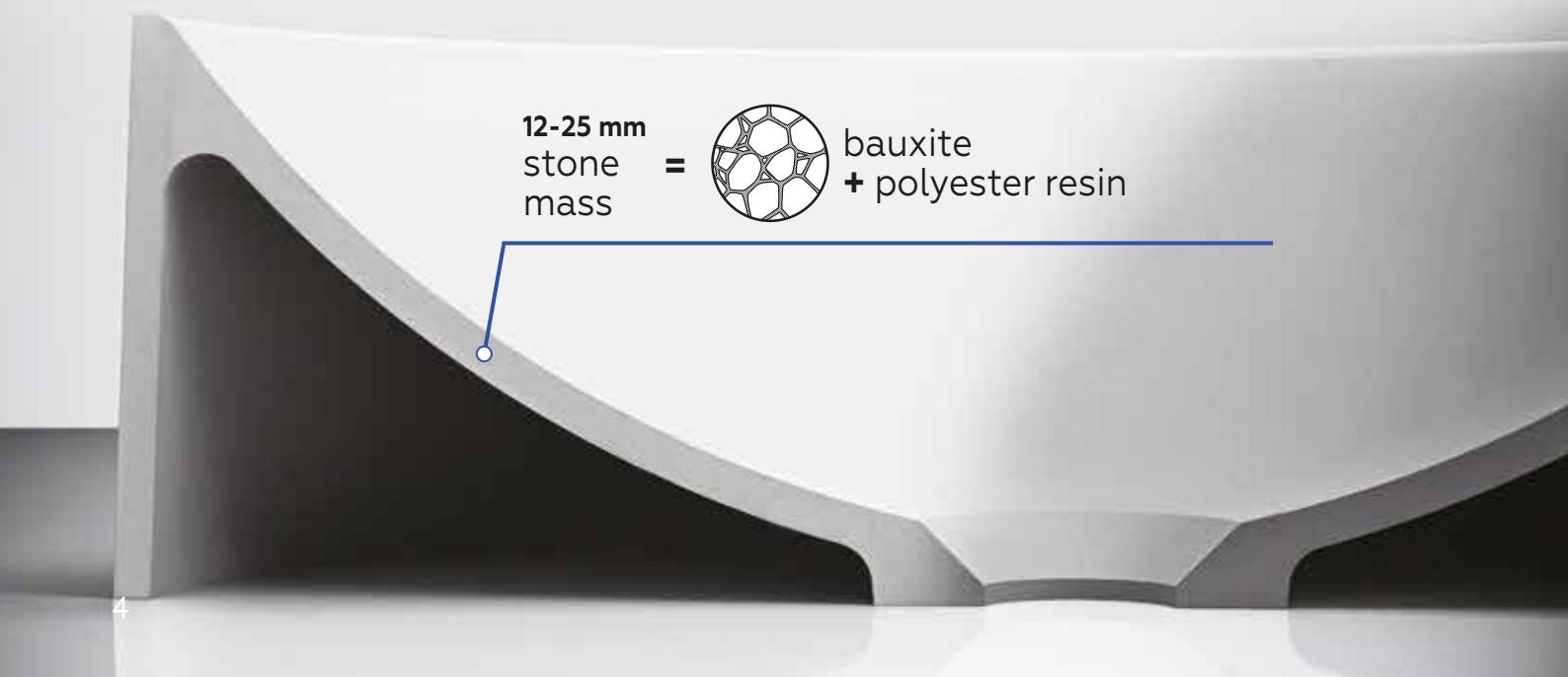

NEW MODELS 2023

WASHBASINS

BATHTUBS

KITCHEN SINKS

CHAMONIX

Material	miramarble (cast marble)
Coating	glossy
Dimensions, mm	655 x 432 x 135
Depth of a bowl, mm	105
Product weight, kg	16,58
Overflow	yes
The type of installation	built-in / countertop
Complete set	a washbasin, decorative overlay, overflow, documentation

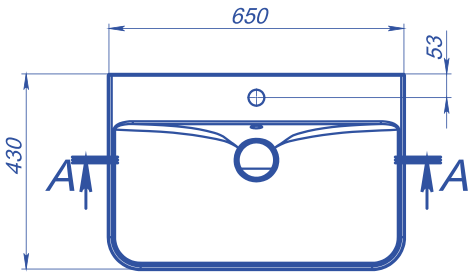

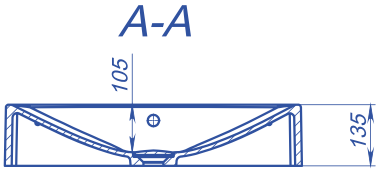

COSMOS

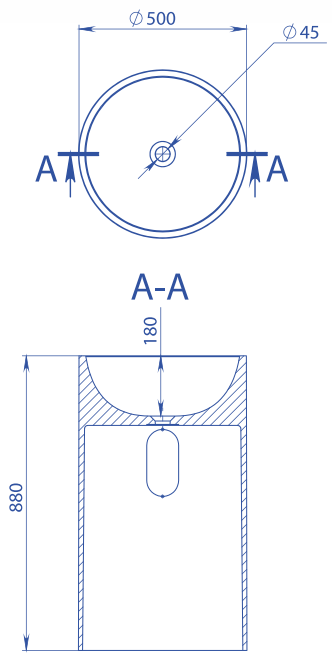

Material	mirasoft
Coating	matte
Dimensions, mm	Ø 500 x 880
Depth of a bowl, mm	180
Product weight, kg	48,35
Overflow	no
The type of installation	freestanding
Complete set	a washbasin, documentation

COUNTRY

HOSET

COUNTRY

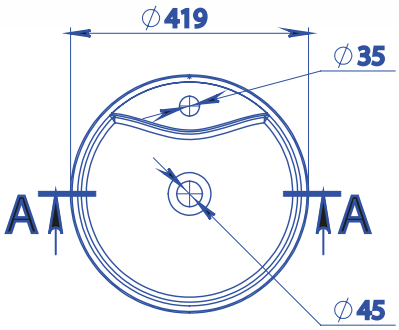

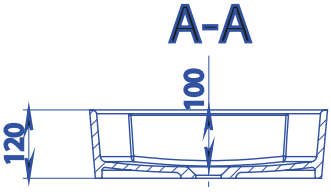

Material	miramarble (cast marble)
Coating	glossy
Dimensions, mm	Ø 419 x 120
Depth of a bowl, mm	100
Overflow	no
The type of installation	countertop
Complete set	a washbasin, documentation

CRASS 1200
HOSET

CRASS 1200

Material	miramarble (cast marble)
Coating	glossy
Dimensions, mm	1200 x 460 x 150
Depth of a bowl, mm	127
Overflow	yes
The type of installation	wall-mounted/countertop
Complete set	a washbasin, overflow, documentation

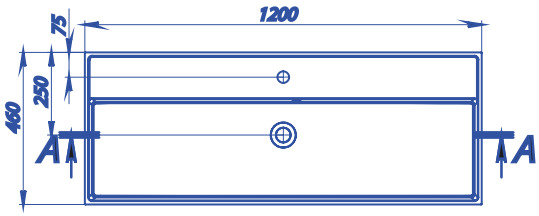

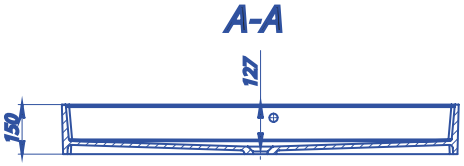

CRASS 460

Material	miramarble (cast marble)
Coating	glossy
Dimensions, mm	460 x 460 x 150
Depth of a bowl, mm	127
Overflow	yes
The type of installation	wall-mounted/countertop
Complete set	a washbasin, overflow, documentation

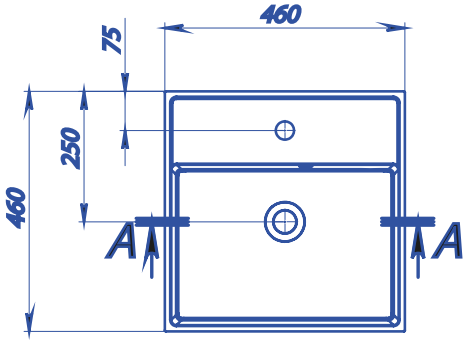

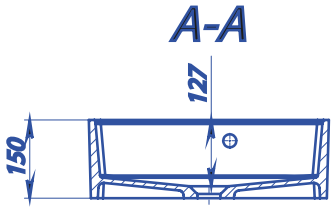

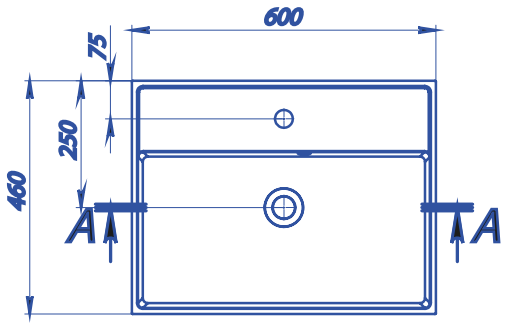

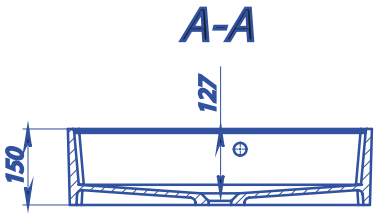

CRASS 600

Material	miramarble (cast marble)
Coating	glossy
Dimensions, mm	600 x 460 x 150
Depth of a bowl, mm	127
Overflow	yes
The type of installation	wall-mounted/countertop
Complete set	a washbasin, overflow, documentation

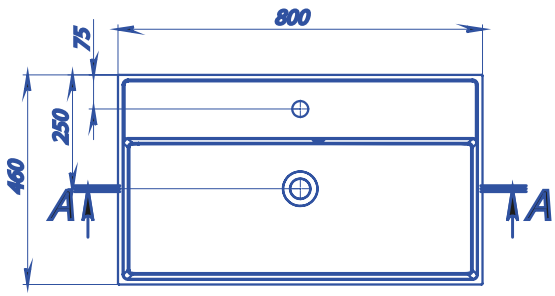

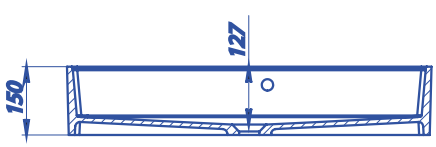

CRASS 800

Material	miramarble (cast marble)
Coating	glossy
Dimensions, mm	800 x 460 x 150
Depth of a bowl, mm	127
Overflow	yes
The type of installation	wall-mounted/countertop
Complete set	a washbasin, overflow, documentation

DEA 800

Material	miramarble (cast marble)
Coating	glossy
Dimensions, mm	800 x 542 x 149
Depth of a bowl, mm	124
Product weight, kg	12,95
Overflow	yes
The type of installation	built-in / countertop
Complete set	a washbasin, overflow, documentation

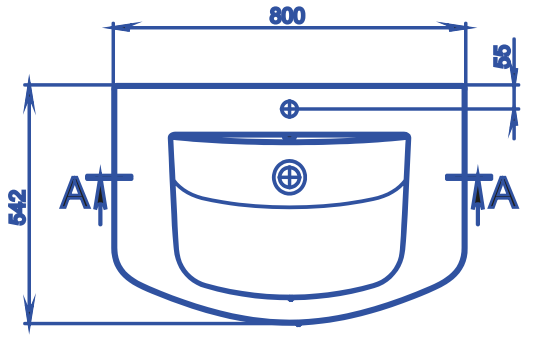

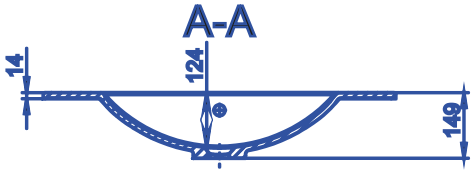

HOSET

DEA 1000

Material	miramarble (cast marble)
Coating	glossy
Dimensions, mm	995x542x149
Depth of a bowl, mm	124
Product weight, kg	16,5
Overflow	yes
The type of installation	built-in / countertop
Complete set	a washbasin, overflow, documentation

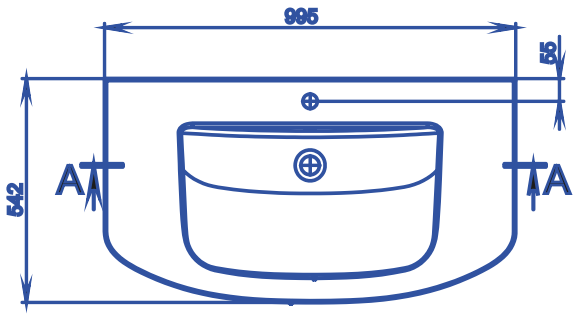

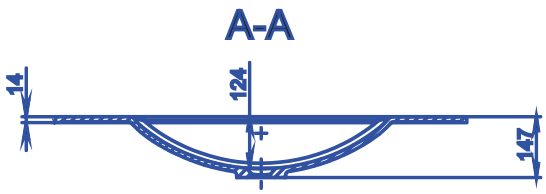

FONTANA

FONTANA L

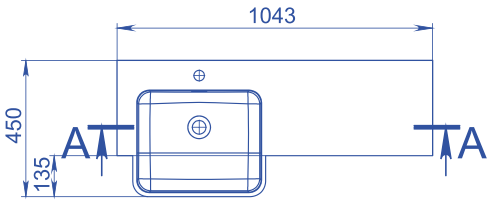

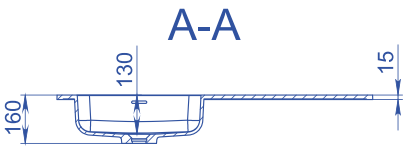

Material	mirasoft
Coating	matte
Dimensions, mm	1043 x 450 x 160
Depth of a bowl, mm	130
Overflow	integrated
The type of installation	countertop
Complete set	a washbasin, documentation

FONTANA R

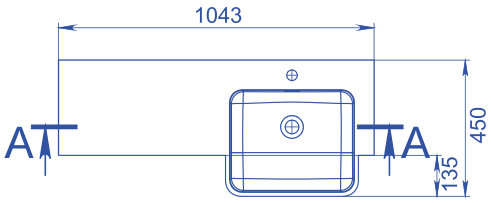

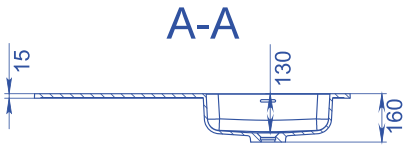

Material	mirasoft
Coating	matte
Dimensions, mm	1043 x 450 x 160
Depth of a bowl, mm	130
Overflow	integrated
The type of installation	countertop
Complete set	a washbasin, documentation

MADISON

Material	miramarble (cast marble)
Coating	glossy
Dimensions, mm	Ø 450 x 123
Depth of a bowl, mm	101
Product weight, kg	5,0
Overflow	yes
The type of installation	built-in
Complete set	a washbasin, overflow, documentation

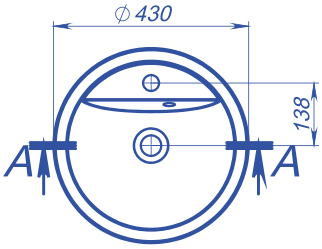

A-A

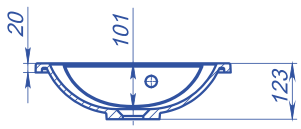

OPTIMUS

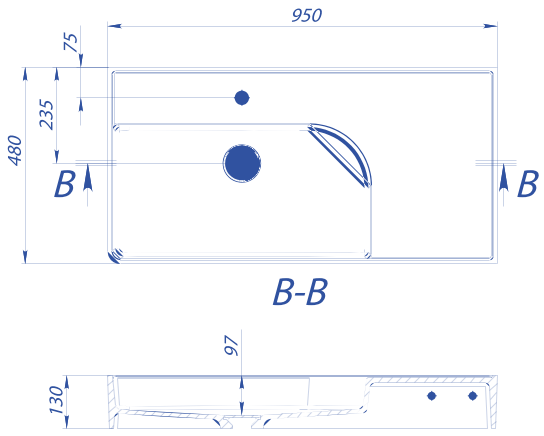

Material	miramarble (cast marble)
Coating	glossy
Dimensions, mm	950 x 480 x 130
Depth of a bowl, mm	97
Overflow	yes
The type of installation	built-in / countertop
Complete set	a washbasin, overflow, documentation

SAN ANDREAS

Material	miramarble (cast marble)
Coating	glossy
Dimensions, mm	Ø 450 x 440
Depth of a bowl, mm	300
Product weight, kg	21,5
Overflow	no
The type of installation	countertop
Complete set	a washbasin, decorative overlay, documentation

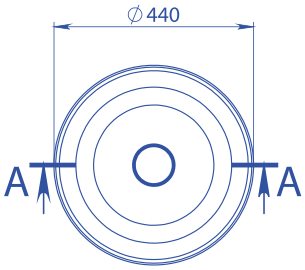

A-A

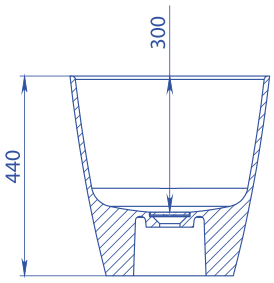

SANTORINI

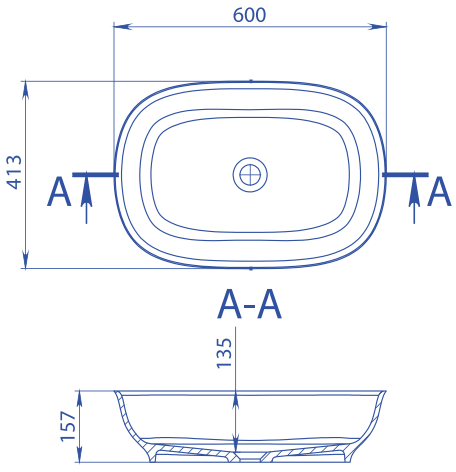

Material	miramarble (cast marble)
Coating	glossy
Dimensions, mm	600 x 413 x 157
Depth of a bowl, mm	135
Product weight, kg	9,55
Overflow	no
The type of installation	countertop
Complete set	a washbasin, documentation

SAPFIRE

Material	miramarble (cast marble)
Coating	glossy
Dimensions, mm	Ø 425 x 160
Depth of a bowl, mm	137
Overflow	no
The type of installation	countertop
Complete set	a washbasin, documentation

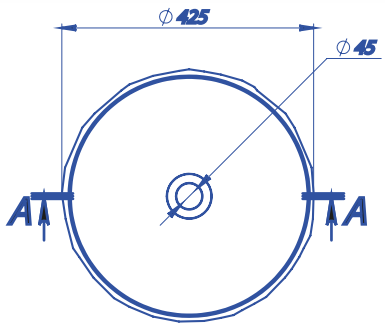

A-A

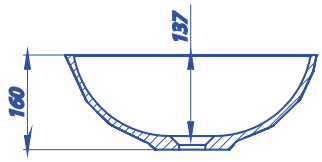

SUNNY

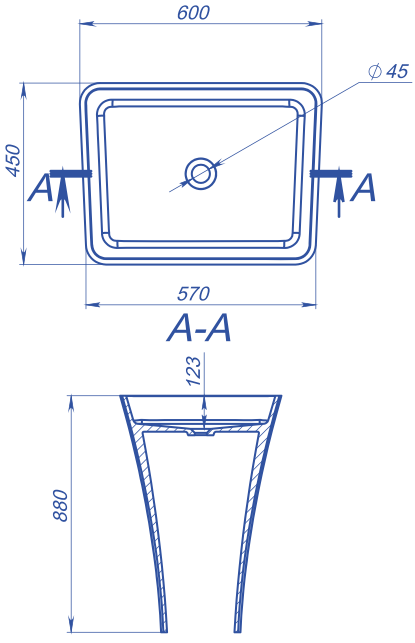

Material	miramarble (cast marble)
Coating	glossy
Dimensions, mm	880 x 600 x 450
Depth of a bowl, mm	123
Product weight, kg	46,1
Overflow	no
The type of installation	freestanding
Complete set	a washbasin, documentation

ANNA

ANNA

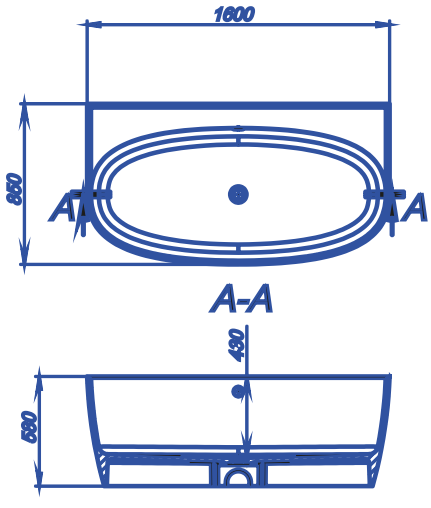

Material	miramarble (cast marble)
The coating	glossy
Overall dimensions, mm	1600 x 850 x 580
Depth of a bowl, mm	430
Product weight, kg	182,6
Volume, l	430
The overflow	integrated
The type of installation	wall-mounted
Complete set	a bath, siphon, documentation

BRAVE NEW
HOSET

BRAVE NEW

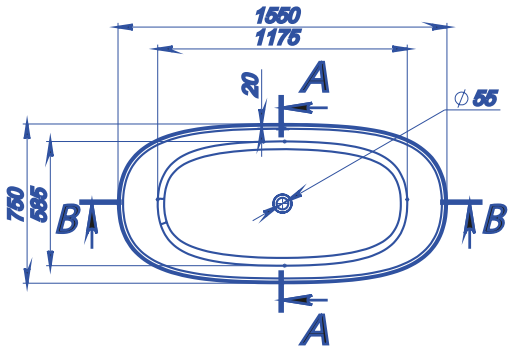

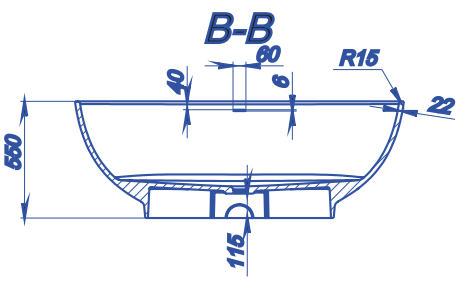

Material	miramarble (cast marble)
The coating	glossy
Overall dimensions, mm	1550 x 750 x 550
Depth of a bowl, mm	400
Volume, l	300
The overflow	integrated
The type of installation	freestanding
Complete set	a bath, siphon, documentation

MARINA
HOSET

MARINA

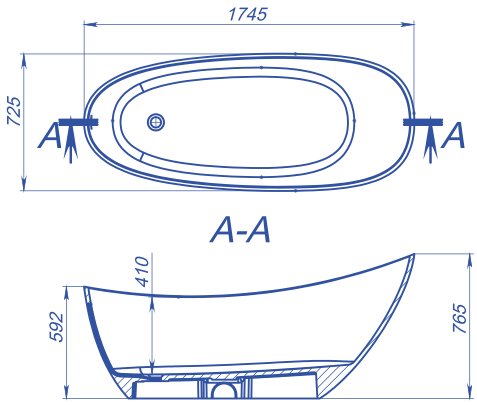

Material	miramarble (cast marble)
The coating	glossy
Overall dimensions, mm	1745 x 725 x 765
Depth of a bowl, mm	410
Volume, l	310
The overflow	integrated
The type of installation	freestanding
Complete set	a bath, siphon, documentation

MELBOURNE

MELBOURNE

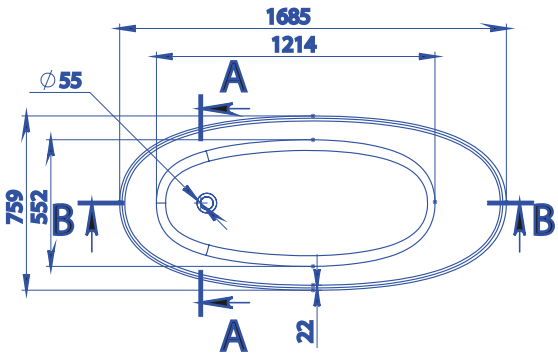

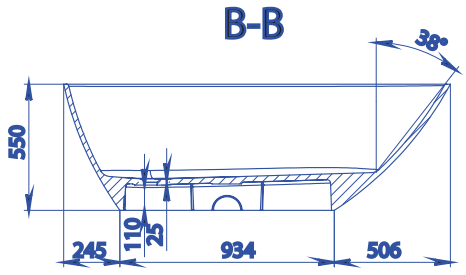

Material	miramarble (cast marble)
The coating	glossy
Overall dimensions, mm	1685 x 760 x 548
Depth of a bowl, mm	415
Volume, l	310
The overflow	no
The type of installation	freestanding
Complete set	a bath, siphon, documentation

SAPFIRE
HOSET

SAPFIRE

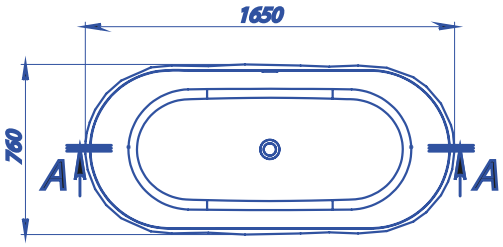

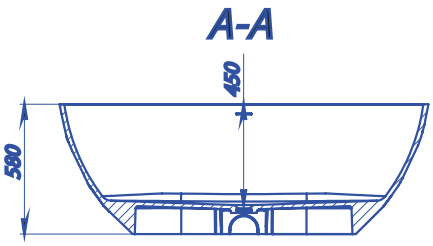

Material	miramarble (cast marble)
The coating	glossy
Overall dimensions, mm	1650 x 760 x 580
Depth of a bowl, mm	450
Volume, l	360
The overflow	integrated
The type of installation	freestanding
Complete set	a bath, siphon, documentation

LAGOON

HOSET

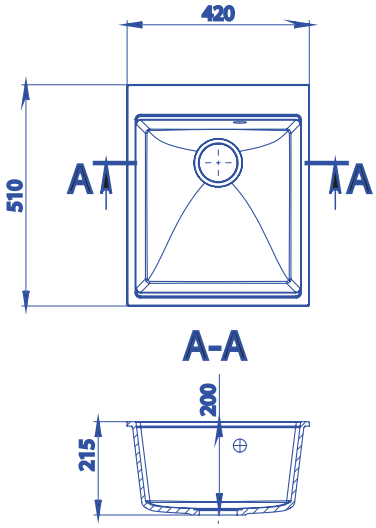

LAGOON 420

Material	quartz sand
The number of bowls	one main
Overall dimensions, mm	420 x 510 x 215
Depth of a bowl, mm	200
Installation type	undertop
Complete set	a kitchen sink, fastenings, siphon, documentation

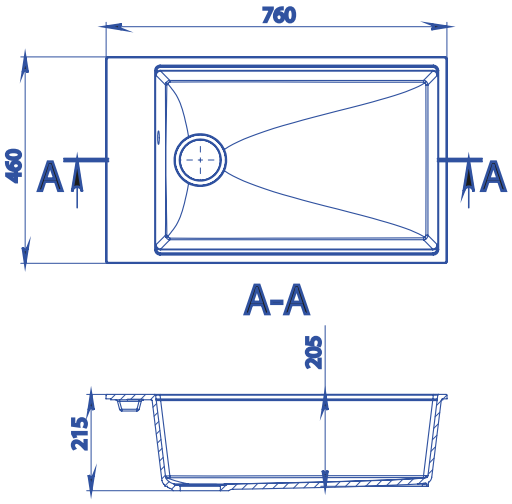

LAGOON 760

Material	quartz sand
The number of bowls	one main
Overall dimensions, mm	760 x 460 x 215
Depth of a bowl, mm	200
Installation type	undertop
Complete set	a kitchen sink, fastenings, siphon, documentation

LISA
HOSET

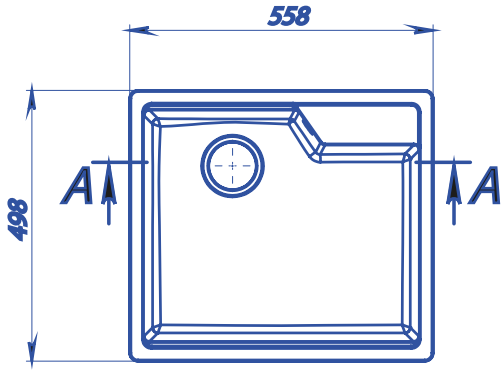

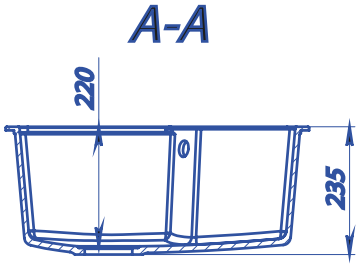

LISA

Material	quartz sand
The number of bowls	one main
Overall dimensions, mm	558 x 498 x 235
Depth of a bowl, mm	222
Installation type	undertop
Complete set	a kitchen sink, fastenings, siphon, documentation

HOSET

HOSET

THAT'S WHAT YOUR HOUSE CHOOSES

HOLDEN AASMÄE
+46730808396 Swedish
+46730808396 English
+46730808396 Deutch
info@swedest.co

Besöksadress
STORSEGELVÄGEN 2 LGH 1103
Ort: 117 71 Stockholm
Län: Stockholms län